Hydraulic Crawler Telescopic Crane FWT65

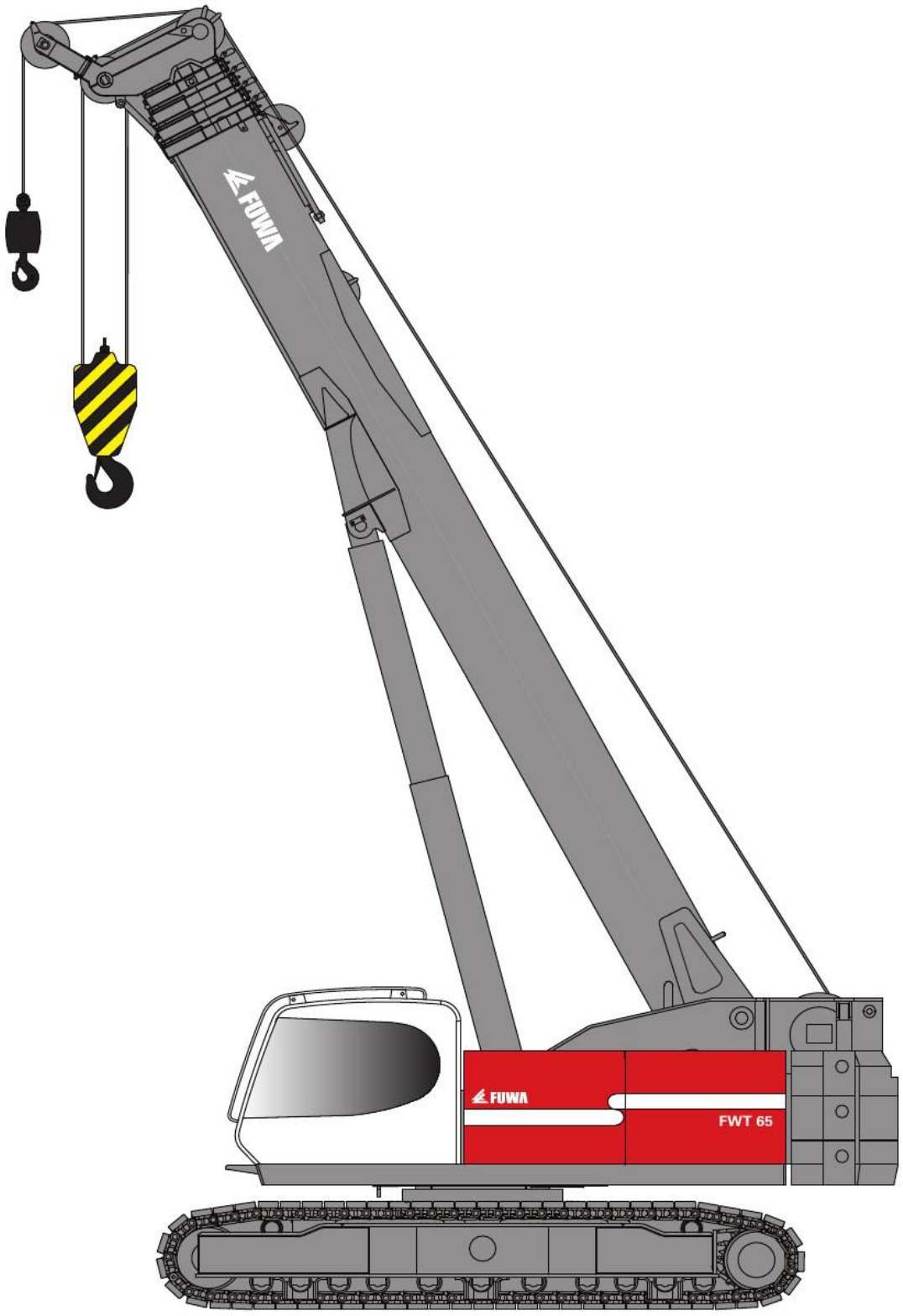

FUWA

Contents

- Features & Technical Data.....1
- Overall Dimension.....2
- Machine Configuration.....3
- Working Range - Boom.....4
- Working Range - Fixed Jib 5
- Boom Load Chart.....6
- Runner Load Chart.....10
- Fixed Jib Load Chart 11
- Transportation Dimensions and Weights.....15

FUWA

Features

- Unique side-by-side winch configuration allowing two powerful winches within same short swing radius of the machine.
- 22mm hoist cables on both winches for fast and powerful hoist with less reevings,
- U-shape boom made of imported 900 grade steel for optimized strength,
- Two oversized telescopic cylinders and oversized cable system for sturdy telescoping,
- Pin option to lock boom when first section is out for foundation jobs,
- Smart engineered box type upper structure for great strength and low center of gravity,
- Optional link-type undercarriage for smooth and safe traveling with load and long life-time,
- Life Cab, excellent vision on job and machine, 20% larger interior and door entrance, easy maintenance flat windows,
- Modular design high efficient hydraulics, simple electronics and easy maintenance,
- All hydraulic functions can be accurately operated simultaneously with low engine rpm.
- Self-assembly counterweight configuration
- Optional extendable (7 ~ 14m) fly jib,
- Optional 2m short jib for complex construction and foundation jobs.

Technical Data

Items	Unit	Data
Max.rated lifting capacity	t	65t
Boom length	m	10.8~38
Boom derricking angle	°	- 2~83
Jib length	m	8/14（8+6 ）
Angle between jib and boom	°	0/20/40
Rope speed	m/min	116
Slewing speed	r/min	0~1.96
Travel speed	Km/h	0~2.5
Rope diameter	mm	22
Main/aux.winch rope length	m/m	170/130
Rated single line pull	t（kN）	7.5 （73.5）
Gradeability (boom retract, cabin at rear)	%	40
Crane mass	t	61t
Overall dimension	mm	12500×3260×3160
Ground bearing pressure	Mpa	0.076

Overall Dimension

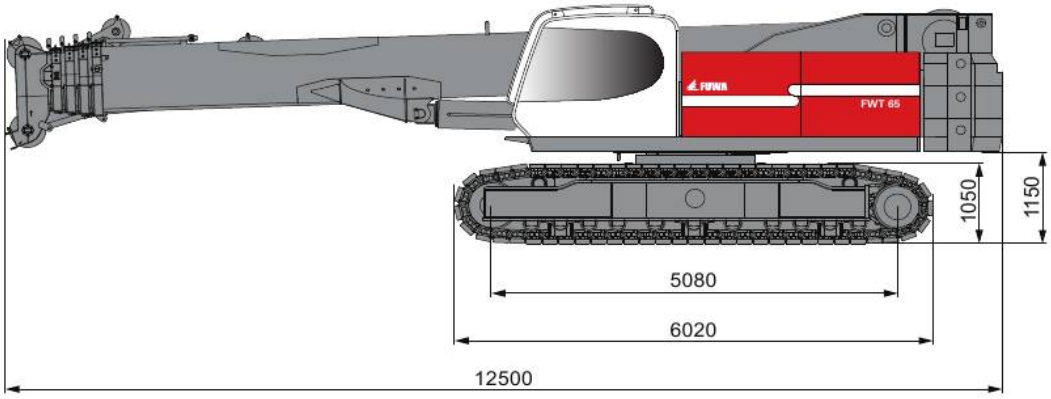

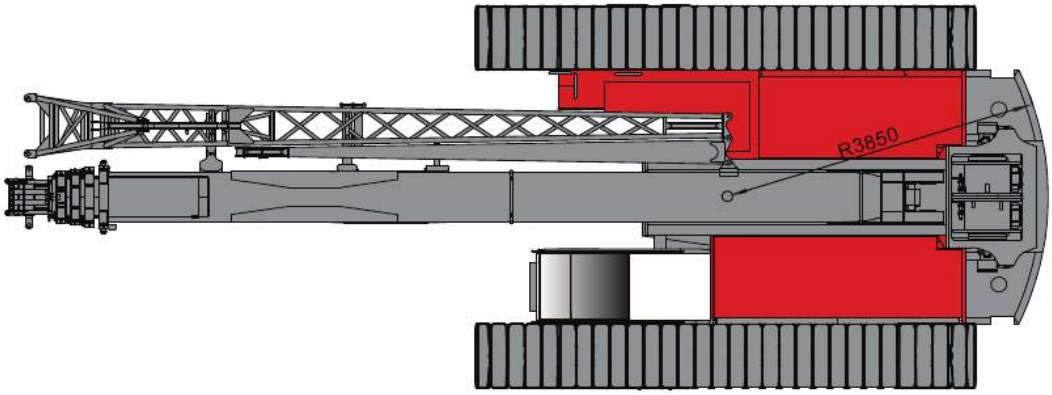

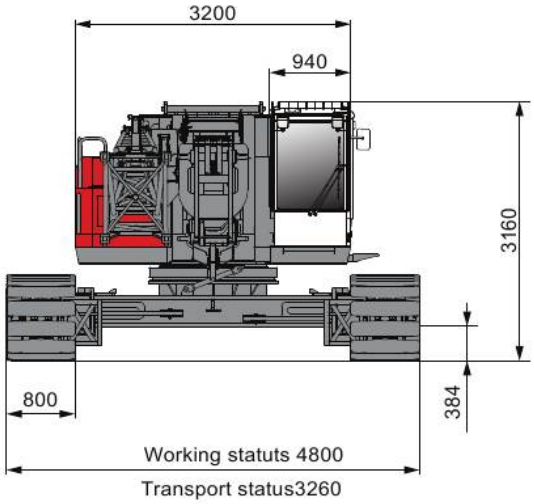

FUWA

Machine Configuration

Boom

Max.lifting capacity: 65t x 3m

Max.boom combination: 38m

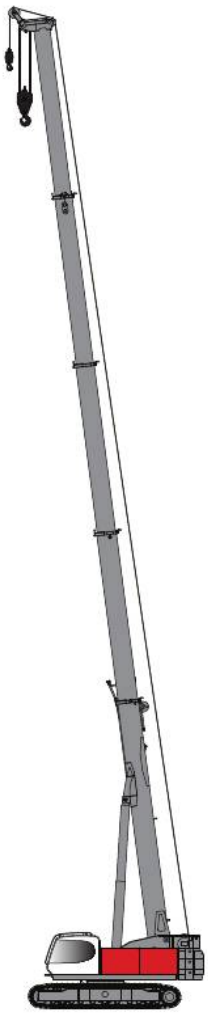

Long runner

Max.lifting capacity:7.5t x 14m

Max.boom combination: 38m+2m

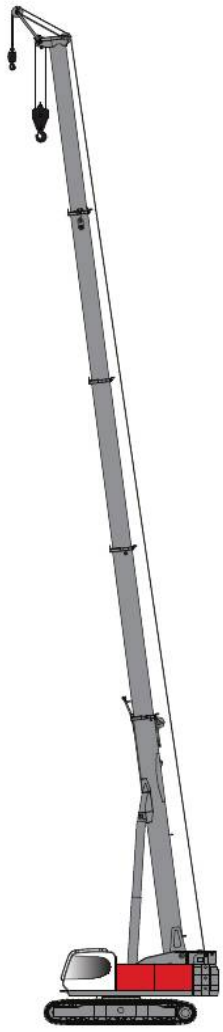

Fixed jib

Max.lifting capacity: 7.5t x 7m

Max.boom combination: 38+8+6m

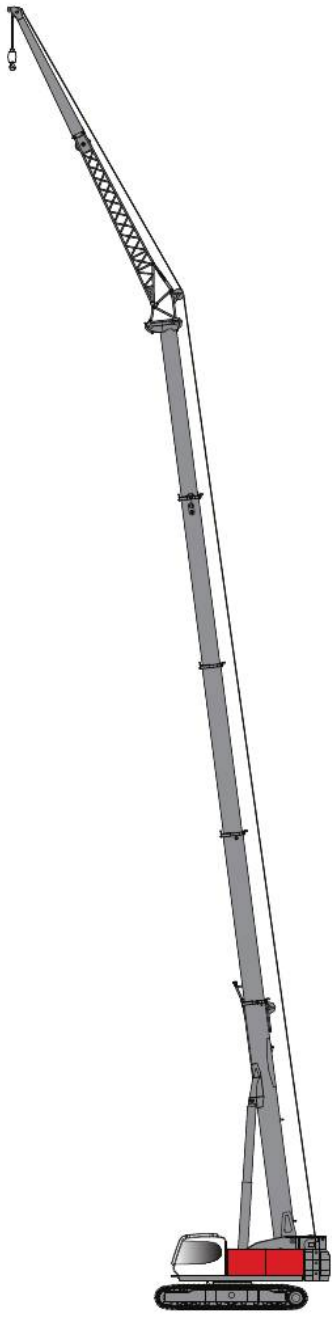

FUWA

Working Range -Boom

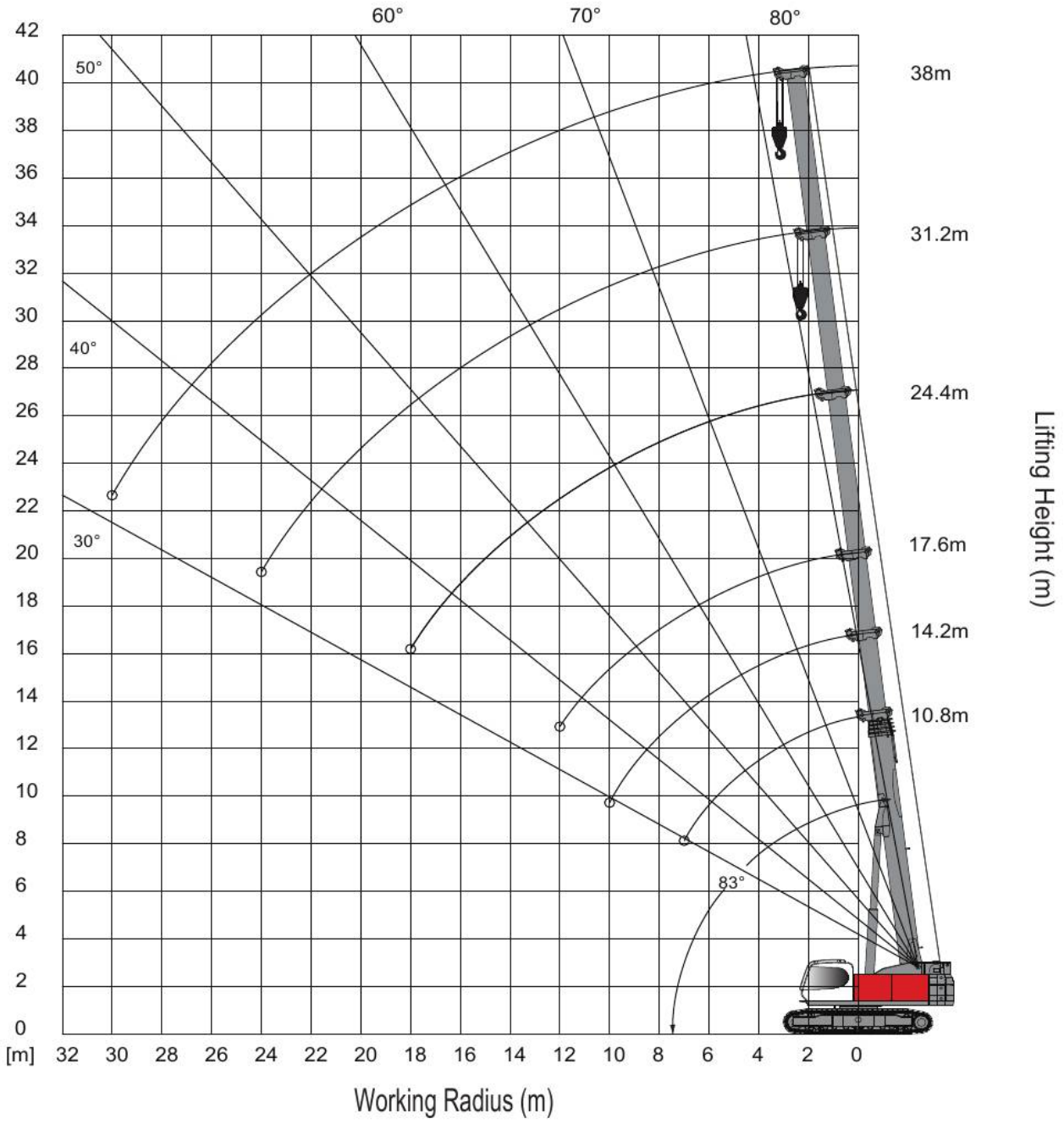

Working Range - Fixed Jib

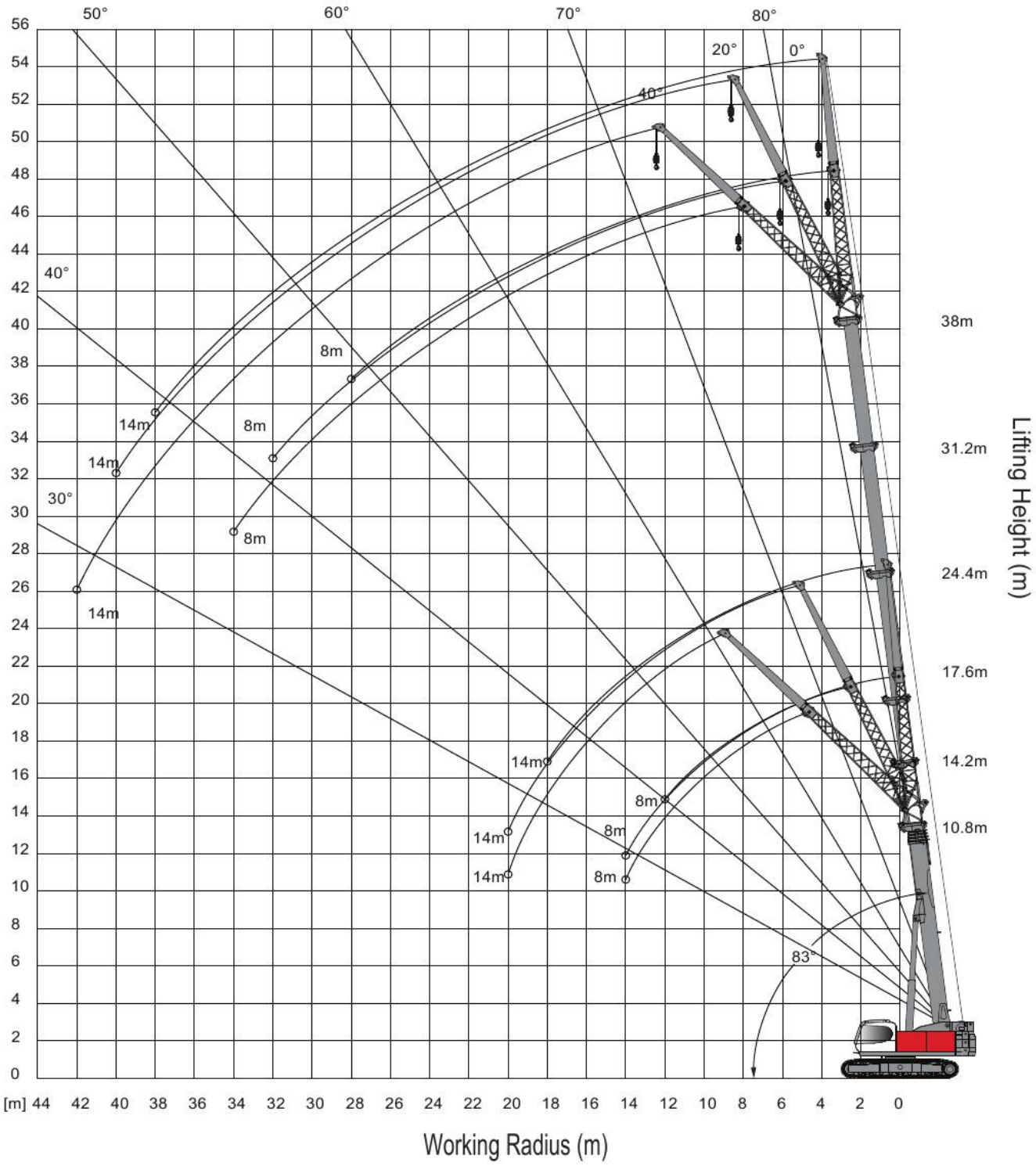

Boom Load Chart

10.8m-38m

360°

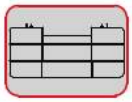
16.1t

Length(m) / Radius(m)	10.8	14.2	17.6	24.4	31.2	38
3	65	60	42	19.3		
3.5	58	57.2	42	19.5	18.8	
4	55.9	55.6	41.3	19.7	18	
4.5	49.5	49.2	39.8	19.9	17.2	11.6
5	43.1	42.8	37.7	20.2	16.5	11.2
6	31	30.7	30.6	20.7	15.2	10.5
7	23.7	23.5	23.3	19.8	14	9.8
8		18.6	18.5	18.2	13	9.2
9		15.2	15	16.4	12.1	8.6
10		12.6	12.5	13.8	11.3	8.1
11			10.4	11.7	10.6	7.6
12			8.8	10.1	9.9	7.2
14				7.6	8.3	6.4
16				5.8	6.5	5.7
18				4.5	5.1	5.1
20					4.1	4.5
22					3.3	3.7
24					2.6	3
26						2.4
28						2
30						1.5

In according with EN13000.

Boom Load Chart

10.8m-38m

360°

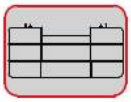
12.5t

Length(m) / Radius(m)	10.8m	14.2m	17.6m	24.4m	31.2m	38m
3	60	60	42	19.3		
3.5	56.9	56.7	42	19.5	18.8	
4	53.8	53.5	41.3	19.7	18	
4.5	47.2	46.8	39.8	19.9	17.2	11.6
5	38.4	38.1	37.7	20.2	16.5	11.2
6	27.5	27.2	27	20.7	15.2	10.5
7	20.9	20.7	20.5	19.8	14	9.8
8		16.3	16.1	17.6	13	9.2
9		13.2	13	14.4	12.1	8.6
10		10.8	10.7	12	11.3	8.1
11			8.9	10.1	10.6	7.6
12			7.4	8.7	9.3	7.2
14				6.4	7.1	6.4
16				4.8	5.5	5.7
18				3.6	4.3	4.7
20					3.3	3.7
22					2.6	3
24					2	2.3
26						1.8
28						1.4
30						1

In according with EN13000.

FUWA

Boom Load Chart

10.8m-38m

360°

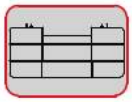
7.8t

Length(m) / Radius(m)	10.8m	14.2m	17.6m	24.4m	31.2m	38m
3	57.5	57.5	42	19.3		
3.5	55	55	42	19.5	18.8	
4	51.1	50.7	41.3	19.7	18	
4.5	39.8	39.4	39.2	19.9	17.2	11.6
5	32.3	31.9	31.8	20.2	16.5	11.2
6	22.8	22.6	22.4	20.7	15.2	10.5
7	17.2	17	16.8	18.3	14	9.8
8		13.2	13.1	14.5	13	9.2
9		10.5	10.4	11.7	12.1	8.6
10		8.5	8.4	9.7	10.4	8.1
11			6.8	8.1	8.8	7.6
12			5.6	6.8	7.5	7.2
14				4.9	5.5	6
16				3.5	4.2	4.6
18				2.5	3.1	3.5
20					2.3	2.7
22					1.7	2
24					1.1	1.5
26						1.1
28						0.7
30						

In according with EN13000.

Boom Load Chart

10.8m-38m

360°

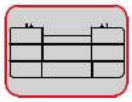
0t

Length(m) / Radius(m)	10.8m	14.2m	17.6m	24.4m	31.2m	38m
3	55	55	42	19.3		
3.5	49.7	49.3	42	19.5	18.8	
4	36	35.6	35.3	19.7	18	
4.5	27.7	27.4	27.1	19.9	17.2	11.6
5	22.2	21.9	21.7	20.2	16.5	11.2
6	15.3	15	14.9	16.5	15.2	10.5
7	11.1	10.9	10.8	12.3	13.2	9.8
8		8.2	8	9.4	10.3	9.2
9		6.2	6.1	7.4	8.3	8.6
10		4.7	4.6	5.9	6.7	7.2
11			3.5	4.7	5.5	5.9
12			2.5	3.8	4.5	5
14				2.4	3.1	3.5
16				1.4	2	2.5
18				0.6	1.3	1.7
20					0.7	1.1
22						0.6
24						
26						
28						
30						

In according with EN13000.

FUWA

Runner Load Chart

10.8m-38m

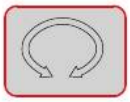
360°

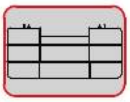
16.1t

Length(m) / Radius(m)	10.8m	14.2m	17.6m	24.4m	31.2m	38m
3	7.5	7.5	7.5			
3.5	7.5	7.5	7.5	7.5		
4	7.5	7.5	7.5	7.5		
4.5	7.5	7.5	7.5	7.5		
5	7.5	7.5	7.5	7.5	7.5	
6	7.5	7.5	7.5	7.5	7.5	7.5
7	7.5	7.5	7.5	7.5	7.5	7.5
8	7.5	7.5	7.5	7.5	7.5	7.2
9		7.5	7.5	7.5	7.5	6.7
10		7.5	7.5	7.5	7.5	6.3
11		7.5	7.5	7.5	7.5	5.9
12			7.5	7.5	7.5	5.5
14			7	7.5	6.9	4.9
16				6.1	6.2	4.4
18				4.8	5.3	3.9
20				3.7	4.2	3.4
22					3.4	2.89
24					2.6	2.47
26					2.1	2.1
28						1.77
30						1.49
32						1.1

In according with EN13000.

Fixed Jib Load Chart

8m

360°

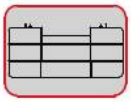
16.1t

Radius(m)	10.8m			14.2m			17.6m		
	8m			8m			8m		
	0°	20°	40°	0°	20°	40°	0°	20°	40°
3	7.5	6.7		7.5	6.8		7.5		
3.5	7.5	6.4		7.5	6.5		7.5	6.5	
4	7.5	6.1		7.5	6.3		7.5	6.3	
4.5	7.5	5.9	4.7	7.5	6.1		7.5	6.1	
5	7.4	5.6	4.6	7.5	5.9	4.6	7.5	5.9	
6	6.6	5.2	4.3	7.5	5.5	4.4	7.5	5.6	4.4
7	6	4.9	4.1	6.8	5.2	4.2	7.4	5.3	4.2
8	5.5	4.6	3.9	6.3	4.9	4.1	6.9	5.1	4.1
9	5.1	4.3	3.8	5.8	4.6	3.9	6.4	4.8	4
10	4.8	4.1	3.6	5.5	4.4	3.8	6	4.6	3.9
11	4.4	3.9	3.5	5.1	4.2	3.7	5.6	4.4	3.8
12	4.2	3.7	3.4	4.8	4.1	3.6	5.3	4.3	3.7
14		3.4	3.3	4.3	3.8	3.4	4.8	4	3.5
16				3.9	3.5	3.3	4.4	3.8	3.4
18							3.9	3.6	3.3
20								3.4	3.3

In according with EN13000.

FUWA

Fixed Jib Load Chart

8m

360°

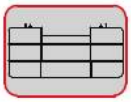
16.1t

Radius(m)	24.4m			31.2m			38m		
	8m			8m			8m		
	0°	20°	40°	0°	20°	40°	0°	20°	40°
3	7.5			7.5					
3.5	7.5			7.5					
4	7.5			7.5					
4.5	7.5	5.8		7.5			6.3		
5	7.5	5.7		7.5			6.2		
6	7.5	5.5		7.5	4.9		5.9		
7	7.5	5.2	4	7.3	4.8		5.7	4.2	
8	7.3	5	3.9	6.9	4.7	3.6	5.5	4.1	
9	6.9	4.9	3.8	6.6	4.5	3.5	5.3	4	3.1
10	6.5	4.7	3.8	6.3	4.4	3.5	5.1	3.9	3.1
11	6.2	4.6	3.7	6.1	4.3	3.4	4.9	3.9	3.1
12	5.9	4.4	3.6	5.9	4.2	3.4	4.8	3.8	3
14	5.4	4.2	3.5	5.5	4.1	3.3	4.5	3.7	3
16	5	4	3.4	4.7	3.9	3.3	4.2	3.6	3
18	3.7	3.8	3.3	3.5	3.8	3.2	3.1	3.5	2.9
20	2.8	3.6	3.3	2.5	3.7	3.2	2.2	3.4	2.9
22	2	2.7	3.1	1.7	2.8	3.1	1.4	2.8	2.9
24	1.4	1.9	2.2	1.1	2	2.5	0.8	2.1	2.7
26		1.3	1.4	0.6	1.4	1.8		1.4	2
28					0.8	1.1		0.9	1.3
30						0.6			0.8

In according with EN13000.

Fixed Jib Load Chart

14m

360°

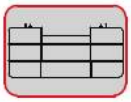
16.1t

Radius(m)	10.8m			14.2m			17.6m		
	14m			14m			14m		
	0°	20°	40°	0°	20°	40°	0°	20°	40°
3	4			4.2			4.2		
3.5	3.8			4.2			4.2		
4	3.6			4			4.2		
4.5	3.4			3.8			4.1		
5	3.3			3.6			3.9		
6	3	2.3		3.3	2.3		3.6		
7	2.8	2.1		3	2.2		3.3	2.3	
8	2.6	2		2.8	2.1		3.1	2.2	
9	2.4	1.9	1.6	2.6	2		2.9	2.1	
10	2.2	1.8	1.6	2.5	1.9	1.6	2.7	2	1.6
11	2.1	1.7	1.5	2.3	1.8	1.5	2.6	1.9	1.6
12	2	1.7	1.5	2.2	1.8	1.5	2.4	1.9	1.5
14	1.8	1.5	1.4	2	1.6	1.4	2.2	1.7	1.5
16	1.6	1.4	1.3	1.8	1.5	1.4	2	1.6	1.4
18	1.5	1.4	1.3	1.7	1.4	1.3	1.8	1.5	1.4
20		1.3	1.3	1.5	1.4	1.3	1.7	1.5	1.3
22					1.3	1.3	1.6	1.4	1.3
24							1.5	1.3	1.3
26								1.3	1.3

In according with EN13000.

FUWA

Fixed Jib Load Chart

14m

360°

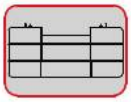
16.1t

Radius(m)	24.4m			31.2m			38m		
	14m			14m			14m		
	0°	20°	40°	0°	20°	40°	0°	20°	40°
3	4.2								
3.5	4.2								
4	4.2			4.2					
4.5	4.2			4.2					
5	4.2			4.2			4		
6	4.1			4.2			4		
7	3.8			4.2			4		
8	3.6	2.3		4			4		
9	3.4	2.2		3.8	2.3		4		
10	3.2	2.1		3.6	2.3		4	2.3	
11	3	2.1	1.6	3.4	2.2		3.8	2.3	
12	2.8	2	1.6	3.2	2.1		3.6	2.2	
14	2.6	1.9	1.5	2.9	2	1.6	3.3	2.1	1.6
16	2.3	1.8	1.5	2.7	1.9	1.5	3	2	1.6
18	2.1	1.7	1.4	2.5	1.8	1.5	2.8	1.9	1.5
20	2	1.6	1.4	2.3	1.7	1.4	2.6	1.8	1.5
22	1.9	1.5	1.3	2.1	1.6	1.4	2.4	1.7	1.4
24	1.7	1.5	1.3	2	1.6	1.4	2.2	1.7	1.4
26	1.6	1.4	1.3	1.8	1.5	1.3	1.6	1.6	1.4
28	1.5	1.4	1.3	1.4	1.5	1.3	1.2	1.6	1.4
30	1.2	1.3	1.3	1	1.4	1.3	0.8	1.5	1.3
32		1.1	1.2	0.6	1.2	1.3		1.2	1.3
34					0.8	1		0.8	1.2
36					0.5	0.6		0.5	0.8

In according with EN13000.

FUWA

Transportation Dimensions and Weights

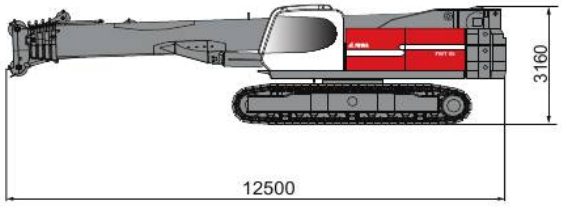

Basic machine	×1
Length	12.5m
Width	3.26m
Height	3.14m
Weight	60200kg

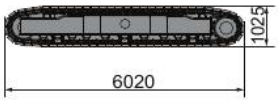

Track frame	×2
Length	6.02m
Width	0.80m
Height	1.03m
Weight	9100kg

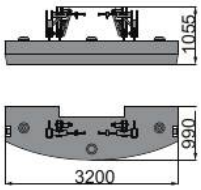

Counterweight A	×1
Length	3.20m
Width	0.99m
Height	1.06m
Weight	7500kg

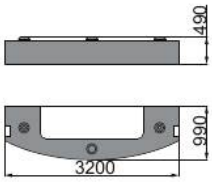

Counterweight B	×1
Length	3.20m
Width	0.99m
Height	0.49m
Weight	4600kg

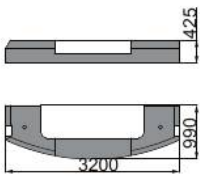

Counterweight C	×1
Length	3.20m
Width	0.99m
Height	0.43m
Weight	3500kg

FUWA

Remark

FUWA Heavy Industry Co.Ltd.
No.2 Shuangyang Road, Shuncheng District,
Fushun-Liaoning, China
P.C. 113126
Tel: +86-24-57649117/57642558
Fax:+86-24-57642766
Email: export@cnfuwa.com
Website:www.cnfuwa.com

Data provided in this document are for reference only
and may change without notice.